VIMAR

TAB 7.

Today, the future of video door entry systems.

ELVOX DOOR ENTRY

2 DUEFILI PLUS

IP

Advanced, connected and always to hand.

Vimar video door entry phone systems now include Tab 7: a device of elegant design with revolutionary functions. The two models available, Tab 7 and Tab 7S, are both inspired by the light and sober styling that characterizes all models of the Tab series. In addition to the usual video door entry phone functions, the Tab 7S also has built-in Wi-Fi, a Video Door App allowing call repetition on your smartphone and many other functions, ensuring total control even when out and about. In short, a product with its sights set firmly on the future.

VIMAR

With built-in Wi-Fi. You can answer the entry phone from anywhere in the home.

The new Tab 7S video door entry phones with built-in Wi-Fi are able to communicate instantly with smartphones and tablets by way of the handy Video Door App. Just a tap, and video door entry phone calls can be answered from any room in the home, with complete freedom of movement.

Video Door App, designed to make life easy for you.

- Immediate configuration.
- Intuitive and customizable interface.
- Available on the Vimar website and from Apple and Google Play stores.

Download on the App Store

GET IT ON Google Play

Make life easy.

At last, you can see who is at the door without actually going there to look... Totally stress-free.

And everything under control, even away from home.

Tab 7S
an IoT product

Answer the door entry phone.

When the door bell sounds, you can talk to whoever is standing outside from wherever you happen to be, using a smartphone or tablet.

And since it is also a cloud-connected device, the Tab 7S offers innovative and practical remote management of numerous tasks, whether simply answering the front door or handling many other more complex functions. With a smartphone, in fact, it becomes possible to dialogue with all parts of the home, however distant, with numerous options for action available.
A few examples.

Tab 7 and Tab 7S are available for video door entry phone systems using Due Fili Plus and IP technology.

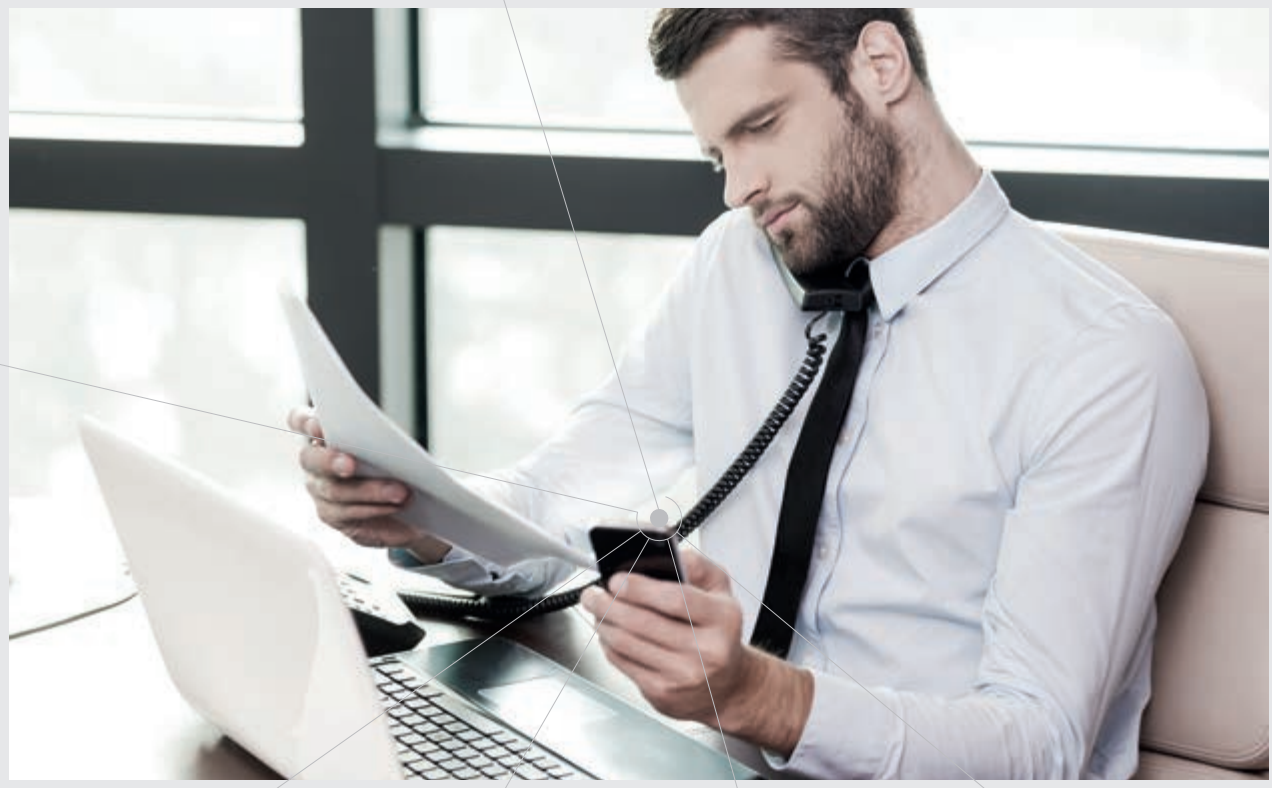

Open the gate.

When you happen to be elsewhere, but need to let someone onto your property, you can open the gate from a smartphone or tablet. Problem solved.

Water the garden.

When on holiday or simply out and about, a simple tap on your smartphone or tablet will ensure the garden gets exactly the amount of water it needs.

Check all cameras.

A smartphone or tablet gives you round-the-clock control over all spaces, and you can always see exactly what is going on.

Intercom calls.

With the Video Door App on a smartphone, audio calls can be made with the Tab 7S to enable an immediate and direct conversation with whoever is at home.

A new view, bigger and sharper than before.

With a generously proportioned, high definition 7” LCD colour screen, the world outside presents a more vivid and inviting picture than ever. And the image of whoever happens to be ringing the bell is perfect too, down to the smallest detail.

7” and ultra-high resolution.

The LCD colour screen offers a magnificently large and well defined image: 7” with 800x480 pixel resolution.

Capacitive keypad and touch controls.

Tab models are equipped with flush capacitive buttons, in keeping with the minimal design of the entire device. The Tab 7S model also offers touch screen functionality: fast and sensitive, this allows the user to activate controls simply by tapping the display.

Tab 7 gives it straight.

Control over all video door entry phone functions is immediate, thanks to a particularly intuitive scrolling menu. In addition, all alerts are delivered by way of a similarly clear and uncluttered graphic interface.

A modern, understated and inimitable appeal.

Inspired by the light and sober look that characterizes technologies of the latest generation, Tab 7 enhances any space in the discreetest of ways. Refined and contemporary, its design gives substance to an essential elegance in harmony with every kind of living space.

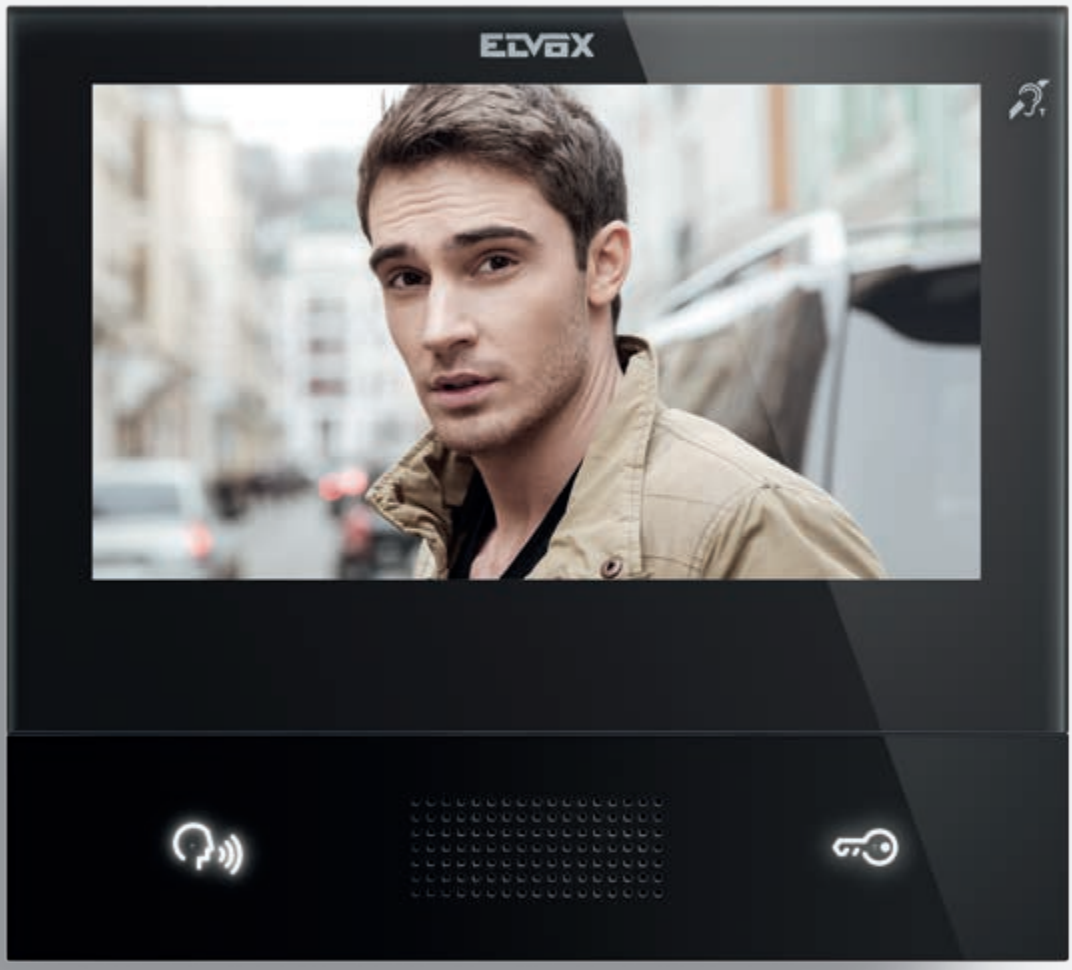

Linear and sober styling.

Striking the perfect balance between simplicity and attention to detail, the Tab 7 comes across as an innovative device, with clean and unfussy lines. A modern blend of rigour and elegant restraint.

No-nonsense speaker.

Its generous proportions stand out below the monitor. Aiming at an audio output as clear and free of disturbance as possible, voice reproduction is always faultless, and of high quality.

Black and White, glass effect.

Two timeless colour schemes, selected to blend in with any interior décor, are used for the special “glass effect”. The effect is sparkling, like glass, and creates artful suggestions of transparency.

Catering for the needs of everyone

The Tab 7 is equipped with a teleloop so that hearing aid wearers can also use the system, and has tactile aids designed to facilitate operation of the controls by persons with impaired vision.

Tab 7 does everything possible to meet every need.

Functionalities common to the two models

TAB **7**

TAB **7S**

Visual call indicators.

Activation of functions accompanied by visual and audible feedback.

Hands-free.

Communication made easy and convenient, with no physical constraints.

Accessibility.

For the visually impaired and hearing aid users.

Alert.

Users can send priority requests for service to porter desks.

Specific functionalities of single models

Scrolling menu with capacitive keypad.

For the main video entry phone functions: answering and opening the door.

Capacitive touch screen display.

Smart, sensitive and immediate: controls activated at a fingertip touch.

Functionalities common to the two models

TAB **7**

TAB **7S**

Visual call indicators.

Activation of functions accompanied by visual and audible feedback.

Hands-free.

Communication made easy and convenient, with no physical constraints.

Accessibility.

For the visually impaired and hearing aid users.

Streaming of CCTV cameras.

A constant watch on the home.

Video door entry phone answering service.

Messages taken in the absence of a reply.

Alert.

Users can send priority requests for service to porter desks.

Built-in Wi-Fi.

Calls can be transferred to smartphone and tablet.

Video door entry phone answering service.

Messages taken in the absence of any reply.

Streaming of CCTV cameras.

A constant watch on the home.

Specific functionalities of single models

Porter video-switchboard.

Communications with porter's desk for notifications, etc.

Scrolling menu with capacitive keypad.

For the main video entry phone functions: answering and opening the door.

Receipt of text messages.

Messages received from porter switchboard.

Capacitive touch screen display.

Smart, sensitive and immediate: controls activated at a fingertip touch.

Built-in Wi-Fi.

Calls can be transferred to smartphone and tablet.

Send and receive text messages.

To and from porter switchboard or other monitors.

Two technologies, numerous advantages.

The Tab 7 series utilizes different technologies: Due Fili Plus and IP. Suitable for single homes and large residential complexes alike; easy to install, using a self-configuration kit or dedicated software running on a PC; both systems offer wide coverage, guaranteeing a high quality audio and video signal.

TAB 7
High visual performance

IP TECHNOLOGY

Unlimited expandability.

Video door entry phone systems can be expanded to include an unlimited number of users. Expansion is fast, and will also exploit existing LANs.

Interface with existing systems.

The video door entry phone system can be integrated with IP CCTV and with third party SIP devices.

Remote support.

Where an internet connection is provided, it becomes possible to access system parameters remotely, for the purposes of maintenance, management and diagnostics.

2 DUEFILI PLUS

Due Fili Plus TECHNOLOGY

Generous capacity.

Scope for creation of systems handling up to 484 entrance panels, 6400 indoor units and 128 porter switchboards.
Replication possible in 32 blocks.

High quality.

The audio and video signal is reproduced with ultra high fidelity up to a distance of 1,200 metres between the entrance panel and indoor station.

No integration issues.

With Due Fili Plus, Tab 7 units can be incorporated into existing systems with no need for additional wiring.

TAB 7S
Advanced and always connected.

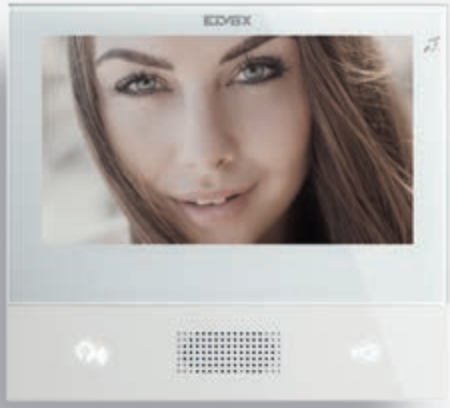

TAB FREE
Hands-free for total comfort.

TAB jr.
The compact solution.

TAB 4.3”
High definition in the home.

General contents

GENERAL SPECIFICATIONS from page 16

AUDIO/VIDEO ENTRY SYSTEM KITS from page 18

TAB 7 DUE FILI PLUS RANGE from page 24

TAB 7 IP RANGE from page 28

Tab 7: general specifications

Tab 7S video door entry phone

Built-in Wi-Fi
for remote management
from smartphone and tablet
with the **Video Door.**

7" LCD display

Accessibility
The monitor has a series of functions for hearing aid users.

7" LCD display
Touch screen display with 800x480 pixel resolution, 16 million colours.

Display with bright gloss finish,
in black or white version.

Capacitive keypad
with backlit buttons for rapid video door entry phone functions: talk/listen, lock release and self-start.

Hands-free
Large speaker for hands-free communication and call ring-tones.

Menu
Functions and settings that can be set directly by the user navigating the menus presented by the touch-screen display.

Touch screen

VIMAR

Download on the App Store

GET IT ON Google Play

Tab 7: general specifications

Tab 7 video door entry phone

7" LCD display
Screen with 800x480 pixel resolution, 16 million colours.

Accessibility
The monitor has a series of functions for hearing aid users.

Display with bright gloss finish,
in black or white version.

Capacitive keypad
with backlit buttons for rapid video door entry phone functions: talk/listen, lock release and self-start. 5 configurable buttons for: intercom calls and activation of auxiliary services (e.g. switching on stair lights).

Hands-free
Large speaker for hands-free communication and call ring-tones.

Installation methods

	Wall mount	Desktop
Fixing plate standard issue with monitor	With back boxes V71701 / V71303 / V71703 / V71318 / V71718	With base 40195

Tab 7S: Due Fili Plus pre-programmed kit

Single dwelling hands-free video door entry phone kit

Single dwelling video door entry phone kit for installation of a video door entry system in a single dwelling using Due Fili Plus technology.
The kit contains:

- a hands-free TAB 7S video entryphone with 7” colour LCD screen with capacitive keypad and touch-screen display for video door entry phone system functions: talk/listen, lock release, self-start, call transfer, auxiliary services (e.g. stair lights), ringtone mute and intercom calls. With built-in Wi-Fi for smartphone calls with the Video Door app.
- Pixel series colour audio/video panel 1 module, with electronic unit 41003 with colour video camera with automatic brightness and speaker and microphone volume, with teleloop for hearing aids, echo canceller, with 4 white backlit LED call buttons with twilight lighting control, call status indicator LED, electric lock command. Complete with support plate 41131.01, grey front module 41103.01, single button 41110, blank module 41113.01 and flush mounting box 9191.
- power supply 6922.1 with 30 Vdc output, supply voltage 110-240 V~ 50/60 Hz, mountable on DIN rail (60715 TH35), occupying 8 x 17.5 mm modules.

Main specifications

Video door entry system kit for connection with only 2 non-polarised conductors (twisted) for video entryphone/power supply, power supply/entrance panel, entrance panel/lock, with call transfer using the Video Door app on smartphone (not supplied).
Recommended use of cable 732H.E.100, 732H.E.500, 732I.E.100, 732I.E.500, not supplied. The kit can be expanded with the addition of other video door entry units and entrance panels.
Power supply 110-240 Vac 50/60 Hz.

Single dwelling hands-free video door entry phone kit

Single dwelling video door entry phone kit for installation of a video door entry system in a single dwelling using Due Fili Plus technology.
The kit contains:

- a hands-free TAB 7S video entryphone with 7” colour LCD screen with capacitive keypad and touch-screen display for video door entry phone system functions: talk/listen, lock release, self-start, call transfer, auxiliary services (e.g. stair lights), ringtone mute and intercom calls. With built-in Wi-Fi for smartphone calls with the Video Door app.
- 1300 series colour audio/video panel 1 module 13K1, with electronic unit 13F2 with box for wall or flush mounting, complete with additional button R131.
- power supply 6922.1 with 30 Vdc output, supply voltage 110-240 V~ 50/60 Hz, mountable on DIN rail (60715 TH35), occupying 8 x 17.5 mm modules.

Main specifications

Video door entry system kit for connection with only 2 non-polarised conductors (twisted) for video entryphone/power supply, power supply/entrance panel, entrance panel/lock, with call transfer using the Video Door app on smartphone (not supplied).
Recommended use of cable 732H.E.100, 732H.E.500, 732I.E.100, 732I.E.500, not supplied. The kit can be expanded with the addition of other video door entry units and entrance panels.
Power supply 110-240 Vac 50/60 Hz.

Video door app

Immediate and intuitive app used to manage video door entry system functions from your smartphone and tablet. With the Wi-Fi built into the Tab 7S video entryphone, using the app you can receive calls from the entrance panel, make intercom calls, open the lock, activate auxiliary services (switch on the stair lights or the irrigation system, etc.), send and receive text messages or consult recorded messages.
using the easy and intuitive interface it is possible to configure the smartphone or tablet using the wizard or by scanning the QR code, which can be found on the video entryphone display, without modifying the router settings or signing up to other configuration services. Available from the Vimar website and from Apple and GooglePlay stores.

Download on the App Store

GET IT ON Google Play

▲ For the availability, please contact the sales network

Tab 7S: Due Fili Plus pre-programmed kit

Single-family video entry system kit

▲ **K40507.01** Single-family Due Fili Plus kit, contains:
- 1 hands-free video door entryphone Tab 7S 40507, white with integrated Wi-Fi for the remote control of the call on smartphone;
- 1 1-module entrance panel Pixel series 41131.01 grey with mounting frame,
- 1 audio/video colour electronic unit 41003,
- 1 audio/video front module 41103.01 grey,
- 1 mounting box 9191,
- 1 power supply unit 6922.1

▲ K40507.01

App **Video Door** available on Vimar site and Apple and Google Play stores

Download on the App Store | GET IT ON Google Play

Single-family video entry system kit

▲ **K40507/M** Single-family Due Fili Plus kit, contains:
- 1 hands-free video door entryphone Tab 7S 40507, white with integrated Wi-Fi for the remote control of the call on smartphone;
- 1 surface/flush mounting entrance panel 1300 series 13K1 with 1 additional button R131,
- 1 audio/video colour electronic unit 13F2,
- 1 power supply unit 6922.1

▲ K40507/M

App **Video Door** available on Vimar site and Apple and Google Play stores

Download on the App Store | GET IT ON Google Play

Tab 7: Due Fili Plus pre-programmed kit

Single dwelling hands-free video door entry phone kit

Single dwelling video door entry phone kit for installation of a video door entry system in a single dwelling using Due Fili Plus technology.
The kit contains:

- a hands-free TAB 7 video entryphone with 7” colour LCD screen, with capacitive keypad for video door entry phone system functions: talk/listen, lock release, self-start, auxiliary services (e.g. stair lights), ringtone mute and intercom calls. Possibility to select different ringtones for calls made from different points, e.g.: entrance panel, landing call, intercom call and illuminated “unanswered call” alerts.
- Pixel series colour audio/video panel 1 module, with electronic unit 41003 with colour video camera with automatic brightness and speaker and microphone volume, with teleloop for hearing aids, echo canceller, with 4 white backlit LED call buttons with twilight lighting control, call status indicator LED, electric lock command. Complete with support plate 41131.01, grey front module 41103.01, single button 41110, blank module 41113.01 and flush mounting box 9191.
- power supply 6922.1 with 30 Vdc output, supply voltage 110-240 V~ 50/60 Hz, mountable on DIN rail (60715 TH35), occupying 8 x 17.5 mm modules.

Main specifications

Video door entry system kit for connection with only 2 non-polarised conductors (twisted) for video entryphone/power supply, power supply/entrance panel, entrance panel/lock, with call transfer using the Video Door app on smartphone (not supplied).
Recommended use of cable 732H.E.100, 732H.E.500, 732I.E.100, 732I.E.500, not supplied. The kit can be expanded with the addition of other video door entry units and entrance panels.
Power supply 110-240 Vac 50/60 Hz.

Single dwelling hands-free video door entry phone kit

Single dwelling video door entry phone kit for installation of a video door entry system in a single dwelling using Due Fili Plus technology.
The kit contains:

- a hands-free TAB 7 video entryphone with 7” colour LCD screen, with capacitive keypad for video door entry phone system functions: talk/listen, lock release, self-start, auxiliary services (e.g. stair lights), ringtone mute and intercom calls. Possibility to select different ringtones for calls made from different points, e.g.: entrance panel, landing call, intercom call and illuminated “unanswered call” alerts.
- Pixel series colour audio/video panel 1 module, with electronic unit 13F2 with box for wall or flush mounting, with additional button R131.
- power supply 6922.1 with 30 Vdc output, supply voltage 110-240 V~ 50/60 Hz, mountable on DIN rail (60715 TH35), occupying 8 x 17.5 mm modules.

Main specifications

Video door entry system kit for connection with only 2 non-polarised conductors (twisted) for video entryphone/power supply, power supply/entrance panel, entrance panel/lock, with call transfer using the Video Door app on smartphone (not supplied).
Recommended use of cable 732H.E.100, 732H.E.500, 732I.E.100, 732I.E.500, not supplied. The kit can be expanded with the addition of other video door entry units and entrance panels.
Power supply 110-240 Vac 50/60 Hz.

Tab 7: Due Fili Plus pre-programmed kit

Single-family video entry system kit

▲ **K40505.01** Single-family Due Fili Plus kit, contains:
- 1 hands-free video door entryphone Tab 7 40505, white;
- 1 1-module entrance panel Pixel series 41131.01 grey with mounting frame,
- 1 audio/video colour electronic unit 41003,
- 1 audio/video front module 41103.01 grey,
- 1 mounting box 9191,
- 1 power supply unit 6922.1

▲ K40505.01

Single-family video entry system kit

▲ **K40505/M** Single-family Due Fili Plus kit, contains:
- 1 hands-free video door entryphone Tab 7 40505, white;
- 1 surface/flush mounting entrance panel 1300 series 13K1 with 1 additional button R131,
- 1 audio/video colour electronic unit 13F2,
- 1 power supply unit 6922.1

▲ K40505/M

Tab 7S: IP self-configuring kit

Single dwelling hands-free video door entry phone kit

Single dwelling video door entry phone kit for installation of a video door entry system in a single dwelling using IP technology. The kit contains:

- a hands-free video entryphone with 7” colour LCD screen with capacitive keypad and touch-screen display for video door entry phone system functions: talk/listen, lock release, self-start, call transfer, auxiliary services (e.g. stair lights), ringtone mute and intercom calls. With built-in Wi-Fi for smartphone calls with the Video Door app.
- Pixel series colour audio/video panel 1 module, with electronic unit IP 41006 with wide-angle colour video camera with automatic brightness and speaker and microphone volume, with teleloop for hearing aids, echo canceller, with 4 white backlit LED call buttons with twilight lighting control, call status indicator LED, electric lock command. Complete with support plate 41131.01, grey front module 41104.01, single button 41110, blank module 41113.01 and flush mounting box 9191.

Conformity to Standards

EMC Directive, EN 60065, EN 61000-6-1, EN 61000-6-3 and EN 60118-4 Standards.

Main specifications

Video door entry system kit for connection via dedicated IP network, for video entryphone and entrance panel/lock, with call transfer via Video Door app on smartphone (not supplied). Connection via Ethernet cable, RJ45 interface (not supplied). PoE power supply.

VIMAR

Download on the App Store

GET IT ON Google Play

Video door app

Immediate and intuitive app used to manage video door entry system functions from your smartphone and tablet. With the Wi-Fi built into the Tab 7S video entryphone, using the app you can receive calls from the entrance panel, make intercom calls, open the lock, activate auxiliary services (switch on the stair lights or the irrigation system, etc.), send and receive text messages or consult recorded messages.
using the easy and intuitive interface it is possible to configure the smartphone or tablet using the wizard or by scanning the QR code, which can be found on the video entryphone display, without modifying the router settings or signing up to other configuration services. Available from the Vimar website and from Apple and GooglePlay stores.

Tab 7S IP - Information and available functions

Header: user name, date and time.
Settings configurable by the user: user name, device ID name, interface language, date and time (automatic or manual), display and button backlight brightness, ringtones, volumes, video answering service message and call options.
Calls log: list of calls, incoming and outgoing, rejected answers and lost calls.
System contact list: • Home: user video door entry phones. • Favourites: contacts selected by the user for quick access from Favourites menu. • Users: other system users. • Accessible entrance panels in the system. • CCTV cameras configured to allow access from monitor. • Porter switchboard stations contactable from monitor. • Functionalities installed in the system to which the user has access; these allow the operation of controls typically for releasing locks or switching on service lights.
Messages: list of text messages received and sent.
Video messages: list of audio and audio-video messages recorded by the video answering service.
Favourites menu: depending on the type of contact it is possible, for example, to start a call or a self-activation, activate a function, and view the images captured by a CCTV camera.
Quick settings menu: access to main controls: ringtone volume, display brightness, activation/deactivation of video answering service.
Status: displays and is used to set user status “Online” or “Do Not Disturb”. In “Do Not Disturb” status, all calls are refused and, if active, the video answering service cuts in. In “Online” status, calls are notified.

Kit connection diagram

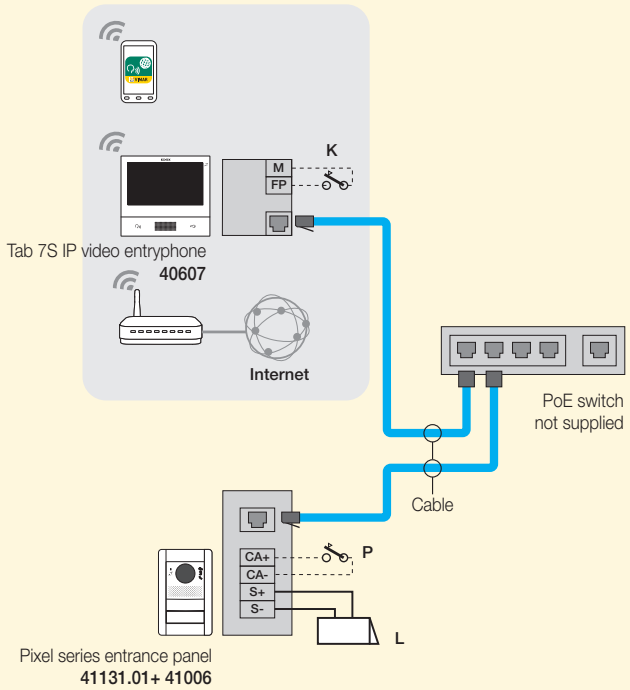

K: Landing call button;
L: 12 V Electric lock;
P: Door release control.

▲ For the availability, please contact the sales network

Tab 7S: IP self-configuring kit

Single-family video entry system kit

▲ **K40607.01** Single-family IP kit, contains:
- 1 hands-free video door entryphone Tab 7S IP Wi-Fi 40607, white with integrated Wi-Fi for the remote control of the call on smartphone;
- 1 1-module entrance panel Pixel series 41131.01 grey with mounting frame,
- 1 audio/video colour wide-angle electronic unit 41006,
- 1 audio/video front module 41104.01 grey,
- 1 mounting box 9191

▲ K40607.01

App **Video Door** available on Vimar site and Apple and Google Play stores

Tab 7 Due Fili Plus video entry phone series

Tab 7S surface mounting hands-free video door entry phones

Hands-free monitor with 7” LCD colour screen. With capacitive keypad and touch-screen display for video door entry phone system functions: talk/listen, lock release, self-start, call transfer, auxiliary services (e.g. stair lights), ringtone mute and intercom calls.
User controls include: brightness, ringtone volume, ringtone mute with activation of “User Away” function, and selection of preferred ringtone. Facility of differentiating ringtones for calls from different points, typically: entrance panel, landing call, intercom call.
The monitor is equipped with a teleloop function for hearing aid users.

Conformity to Standards

EMC Directive, EN 60065, EN 61000-6-1, EN 61000-6-3 and EN 60118-4 Standards.

Main specifications

- Power supply: Due Fili Plus Bus.
- Input for additional power supply (6923).
- 7” LCD display, 800x480 pixel, 16M colours.
- Display with bright gloss finish, colour black or white.
- Capacitive keypad with backlit symbols (when in operation) and touch-screen display.
- Configurable video answering service, up to 100 messages.
- Alert function allowing users to send priority requests for service to porter desks. Available only if porter switchboard is installed in the system.
- System contact list and favourites menu for quick access.
- Full-duplex hands-free speakerphone with echo canceller.
- Electronic ringtone: with the option of selecting different tunes for entrance panel, intercom or landing calls.
- Input for landing calls.
- Support for integration with CCTV cameras connected to Due Fili Plus system.
- Support for remote call service on smartphone/tablet exploiting Wi-Fi connectivity.
- Designed for surface mounting installation with fixing plate applicable to modular back box (Vimar round 2-module V71701, Vimar rectangular vertical/horizontal 3-module V71303/V71703, Vimar rectangular 4+4 modules V71318/V71718).
- Dimensions of surface mounting monitor: 166x184x24.2 mm.

Tab 7S - n and available functions

Header: user name, date and time.
Settings configurable by the user: user name, device ID name, interface language, date and time (automatic or manual), display brightness, display background and button backlight, ringtones, volumes, video answering service message and call options.
Video messages: list of audio and audio-video messages recorded by video-answering service.
Quick settings menu: access to main controls: ringtone volume, display brightness, activation/deactivation of video answering services.
Favourites menu: depending on the type of contact it is possible, for example, to start a call or a self-activation, activate a function, and view the images captured by a CCTV camera.
Status: displays and is used to set user status “Online” or “Do Not Disturb”. In “Do Not Disturb” status, all calls are refused and, if active, the video answering service cuts in. In “Online” status, calls are notified.

Technical data

Inputs	
power supply from Bus	28 Vdc nominal
current draw in stand-by	120 mA
max current draw in operation	400 mA
additional power supply	with 6923
operating temperature	-5 °C to +40 °C

Option of using additional power supply 6923 where necessary (bus voltage at monitor terminals 1 and 2 registering < 24 Vdc)

Display, buttons and connecting terminal blocks

A) Touch screen display.
B) Answer/end conversation button and lock release button.
C) Terminal block for connecting the video door entry phone: to the Due Fili Plus system and for connection to an external button for landing calls.
D) Fixing plate.

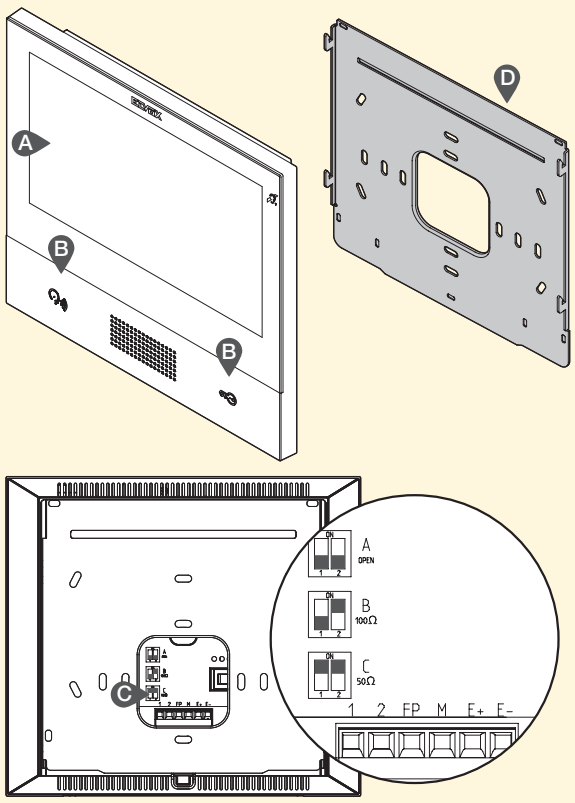

▲ For the availability, please contact the sales network

Tab 7 Due Fili Plus video entry phone series

Tab 7S surface mounting hands-free video door entry phones

▲ 40507	Surface mounting hands-free video door entry phone for Due Fili Plus system, built-in Wi-Fi allowing call repetition on smartphone with dedicated App, 7” LCD colour touch-screen, capacitive keypad for video door entry phone functions and intercom calls, video answering service, teleloop for hearing aid users, fixing bracket for application to round or rectangular back boxes, white
▲ 40507.04	As above, black

▲ 40507
white

▲ 40507.04
black

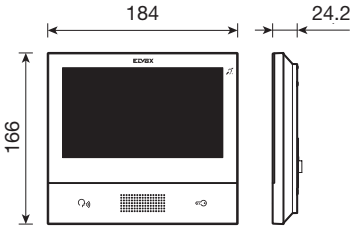

Accessories

▲ 40195	Desktop base for Tab 7 series monitors

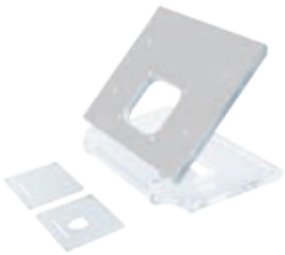

▲ 40195

Tab 7 Due Fili Plus video entry phone series

Tab 7 surface mounting hands-free video door entry phones

Hands-free monitor with 7” LCD colour screen. With capacitive keypad for video door entry phone system functions: talk/listen, lock release, self-start, auxiliary services (e.g. stair lights), ringtone mute and intercom calls. Facility of differentiating ringtones for calls from different points, typically: entrance panel, landing call, intercom call.
Illuminated “unanswered call” alerts.
The monitor is equipped with a teleloop function for hearing aid users.

Conformity to Standards

EMC Directive, EN 60065, EN 61000-6-1, EN 61000-6-3 and EN 60118-4 Standards.

Main specifications

- Power supply: Due Fili Plus Bus.
- 7” LCD display, 800x480 pixel, 16M colours.
- Monitor made of ABS with bright gloss finish on front.
- Soft touch capacitive keypad with backlit symbols (during operation).
- Alert function allowing users to send priority requests for service to porter desks. Available only if porter switchboard is installed in the system.
- Electronic ringtone: with the option of selecting from 10 different tunes for entrance panel calls, intercom calls and landing calls.
- Input for landing call.
- Designed for surface mounting installation with fixing plate applicable to modular back box (Vimar round 2-module V71701, Vimar rectangular vertical/horizontal 3-module V71303/V71703, Vimar rectangular 4+4 modules V71318/V71718).
- Dimensions of surface mounting monitor: 166x184x24.2 mm.

Technical data	
Inputs	
power supply from Bus	28 Vdc nominal
current draw in stand-by	25 mA
max current draw in operation	350 mA
operating temperature	-5 °C to +40 °C

Information and functions available from the Tab 7 display

	Answer/end conversation button
	Lock release button.

5 preset buttons:

- Self-start.
- Auxiliary service 1 (Stair light).
- Access configurations menu.
- Auxiliary service 2 (Due Fili Plus function F1).
- Activation of User Away function with ringtone mute or microphone mute. With the User Away function active, the button blinks to indicate refused calls.

Buttons can be reprogrammed to activate other auxiliary services or intercom calls.

Buttons and connecting terminal blocks

A) 5 preset buttons.
B) Answer/end conversation button and lock release button.
C) Terminal block for connecting the video door entry phone: to the Due Fili Plus system and for connection to an external button for landing calls.
D) Fixing plate.

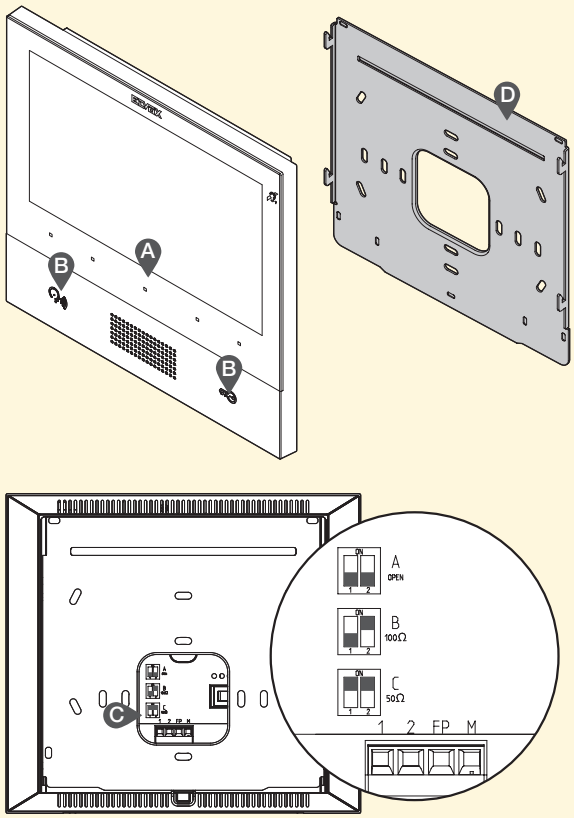

▲ For the availability, please contact the sales network

Tab 7 Due Fili Plus video entry phone series

Tab 7 surface mounting hands-free video door entry phones

▲ **40505**	Surface mounting hands-free video entry phone monitor for Due Fili Plus system with 7” LCD colour display, capacitive keypad for video door entry functions and intercom calls, teleloop for hearing aid users, fixing bracket for application to round or rectangular back box, white
▲ **40505.04**	As above, black

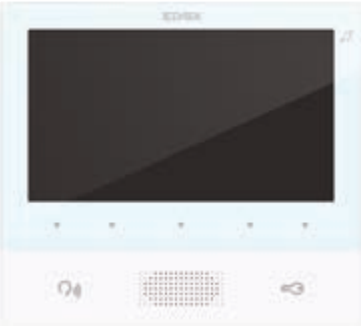

▲ **40505**
white

▲ **40505.04**
black

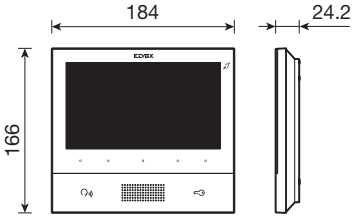

Accessories

▲ **40195**	Desktop base for Tab 7 series monitors

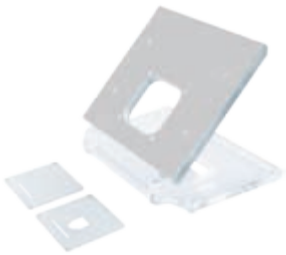

▲ **40195**

Tab 7 IP video entry phone series

Tab 7S IP surface mounting hands-free video door entry phones

Hands-free monitor with 7” LCD colour screen. With capacitive keypad and touch-screen display for video door entry phone system functions: talk/listen, lock release, self-start, call transfer, auxiliary services (e.g. stair lights), ringtone mute and intercom calls.
User controls include: brightness, ringtone volume, ringtone mute with activation of “User Away” function, and selection of preferred ringtone. Facility of differentiating ringtones for calls from different points, typically: entrance panel, landing call, intercom call.
The monitor is equipped with a teleloop function for hearing aid users.

Conformity to Standards

EMC Directive, EN 60065, EN 61000-6-1, EN 61000-6-3 and EN 60118-4 Standards.

Main specifications

- Power supply: PoE class 0, from ethernet network.
- 7” LCD display, 800x480 pixel, 16M colours.
- Display with bright gloss finish, colour black or white.
- Camera zoom-&-scan mode controlled from monitor.
- Capacitive keypad with backlit symbols (when in operation) and touch-screen display.
- Configurable video answering service, up to 100 messages.
- Receipt and sending of text messages.
- Alert function allowing users to send priority requests for service to porter desks. Available only if porter switchboard is installed in the system.
- System contact list and favourites menu for quick access.
- Full-duplex hands-free speakerphone with echo canceller.
- Electronic ringtone: with the option of selecting different tunes for entrance panel, intercom or landing calls.
- Input for landing calls.
- Support for IP CCTV integration.
- Support for remote call service from smartphone/tablet exploiting Wi-Fi connectivity.
- Designed for surface mounting installation with fixing plate applicable to modular back box (Vimar round 2-module V71701, Vimar rectangular vertical/horizontal 3-module V71303/V71703, Vimar rectangular 4+4 modules V71318/V71718).
- Dimensions of surface mounting monitor: 166x184x24.2 mm.

Technical data	
Inputs	
power supply from ethernet network	PoE, class 0
Network interface	RJ45 Ethernet 10/100 Mps (certified)
nominal power consumption	8 W
ethernet connection	RJ45 - 10/100 Mps
operating temperature	-5 °C to +40 °C

Tab 7S IP - Information and available functions

Header: user name, date and time.
Settings configurable by the user: user name, device ID name, interface language, date and time (automatic or manual), display and button backlight brightness, ringtones, volumes, video answering service message and call options.
Calls log: list of calls, incoming and outgoing, rejected answers and lost calls.
System contact list: • Home: user video door entry phones. • Favourites: contacts selected by the user for quick access from Favourites menu. • Users: other system users. • Accessible entrance panels in the system. • CCTV cameras configured to allow access from monitor. • Porter switchboard stations contactable from monitor. • Functionalities installed in the system to which the user has access; these allow the operation of controls typically for releasing locks or switching on service lights.
Messages: list of text messages received and sent.
Video messages: list of audio and audio-video messages recorded by the video answering service.
Favourites menu: depending on the type of contact it is possible, for example, to start a call or a self-activation, activate a function, and view the images captured by a CCTV camera.
Quick settings menu: access to main controls: ringtone volume, display brightness, activation/deactivation of video answering service.
Status: displays and is used to set user status “Online” or “Do Not Disturb”. In “Do Not Disturb” status, all calls are refused and, if active, the video answering service cuts in. In “Online” status, calls are notified.

Display, tasti e morsettiera di collegamento

A) Display touch-screen.
B) Tasto parla/ascolta e tasto apertura serratura.
C) Connettore RJ45 e morsetti per chiamata fuori porta.
D) Piastra di fissaggio.

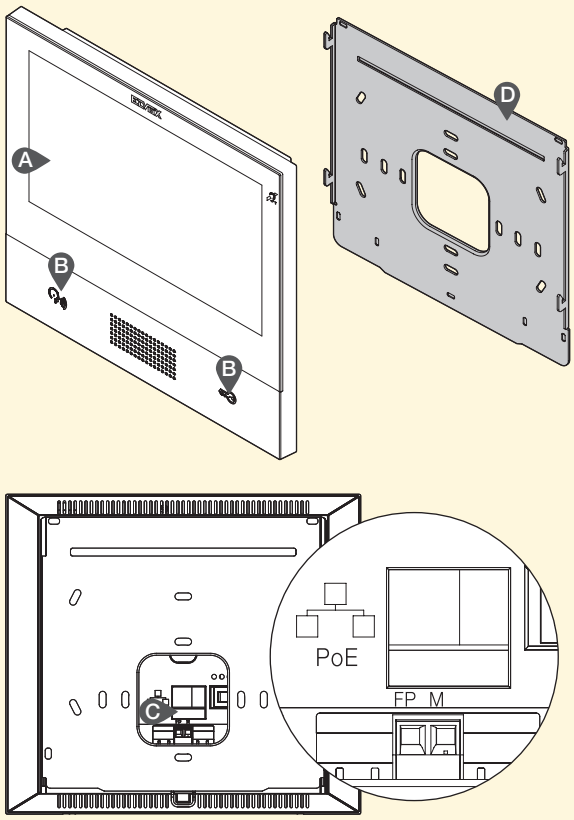

▲ For the availability, please contact the sales network

Tab 7 IP video entry phone series

Tab 7S IP surface mounting hands-free video door entry phones

▲ **40607**	Surface mounting hands-free video door entry phone for IP system, built-in Wi-Fi allowing remote use on smartphone with dedicated App, 7" LCD colour touch-screen, capacitive keypad for video door entry phone functions and intercom calls, video answering service, teleloop for hearing aid users, fixing bracket for application to round or rectangular back boxes, PoE power supply, white
▲ **40607.04**	As above, black

▲ **40607**
white

▲ **40607.04**
black

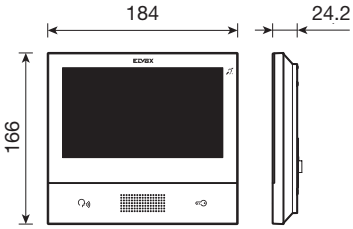

Accessories

▲ **40195**	Desktop base for Tab 7 series monitors

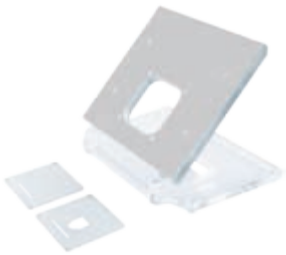

▲ **40195**

Tab 7 IP video entry phone series

Tab 7 IP surface mounting hands-free video door entry phones

Hands-free monitor with 7” LCD colour screen. With capacitive keypad for video door entry phone system functions: talk/listen, lock release, self-start, auxiliary services (e.g. stair lights), ringtone mute and intercom calls. Facility of differentiating ringtones for calls from different points, typically: entrance panel, landing call, intercom call.
Illuminated “unanswered call” alerts and video answering service messages.
The monitor is equipped with a teleloop function for hearing aid users.

Conformity to Standards

EMC Directive, EN 60065, EN 61000-6-1, EN 61000-6-3 and EN 60118-4 Standards.

Main specifications

- Power supply: PoE class 0, from ethernet network.
- 7” LCD display, 800x480 pixel, 16M colours.
- Monitor made of ABS with bright gloss finish on front.
- Soft touch capacitive keypad with backlit symbols (during operation).
- Video answering service with up to 10 messages.
- Receipt of text messages.
- Alert function allowing users to send priority requests for service to porter desks. Available only if porter switchboard is installed in the system.
- System contact list and favourites menu for quick access.
- Full-duplex hands-free speakerphone with echo canceller.
- Electronic ringtone: with the option of selecting different tunes for entrance panel, intercom or landing calls.
- Input for landing calls.
- Support for IP CCTV integration.
- Designed for surface mounting installation with fixing plate applicable to modular back box (Vimar round 2-module V71701, Vimar rectangular vertical/horizontal 3-module V71303/V71703, Vimar rectangular 4+4 modules V71318/V71718).
- Dimensions of surface mounting monitor: 166x184x24.2 mm.

Dati tecnici	
Inputs	
power supply from ethernet network	PoE, class 0
Network interface	RJ45 Ethernet 10/100 Mps (certified)
nominal power consumption	8 W
operating temperature	-5 °C to +40 °C

Information and functions available from the Tab 7 display

Header: user name, date and time.
Settings configurable by the user: user name, device ID name, interface language, date and time (automatic or manual), display and button backlight brightness, ringtones, volumes, video answering service message and call options.
Calls log: list of calls, incoming and outgoing, rejected answers and lost calls.
System contact list: • Home: user video door entry phones. • Favourites: contacts selected by the user for quick access from Favourites menu. • Users: other system users. • Accessible entrance panels in the system. • CCTV cameras configured to allow access from monitor. • Porter switchboard stations contactable from monitor. • Functionalities installed in the system to which the user has access; these allow the operation of controls typically for releasing locks or switching on service lights.
Messages: list of text messages received.
Video messages: list of audio and audio-video messages recorded by the video answering service.
Favourites menu: depending on the type of contact it is possible, for example, to start a call or a self-activation, activate a function, and view the images captured by a CCTV camera.
Quick settings menu: access to main controls: cleaning, ringtone mute, activation/deactivation of video answering service.
Status: displays and is used to set user status “Online” or “Do Not Disturb”. In “Do Not Disturb” status, all calls are refused and, if active, the video answering service cuts in. In “Online” status, calls are notified.

Buttons and connecting terminal blocks

A) 5 preset buttons.
B) Talk/listen button and lock release button.
C) RJ45 connector and terminals for landing calls.
D) Fixing plate.

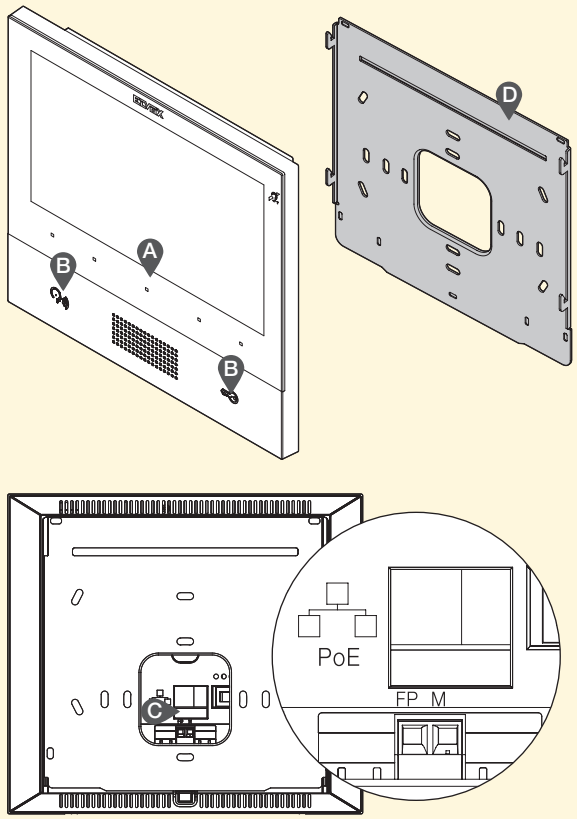

▲ For the availability, please contact the sales network

Tab 7 IP video entry phone series

Tab 7 surface mounting hands-free video door entry phones

▲ **40605**	Surface mounting hands-free video entry phone monitor for IP system with 7” LCD colour display, capacitive keypad for entry phone functions and intercom calls, teleloop for hearing aid users, fixing bracket for application to round or rectangular back box, PoE power supply, white
▲ **40605.04**	As above, black

▲ **40605**
white

▲ **40605.04**
black

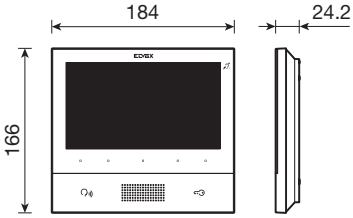

Accessories

▲ **40195**	Desktop base for Tab 7 series monitors

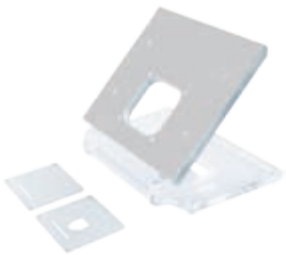

▲ **40195**

Vimar reserves the right to modify the characteristics of the products featured at any time and without prior notice.
Due to page layout constraints, the photographs and diagrams are not shown in proportion.

B.C17065 EN 1709
8 007352 579927

VIMAR

Viale Vicenza, 14
36063 Marostica VI - Italy
Tel. +39 0424 488 600
Fax +39 0424 488 709
www.vimar.com